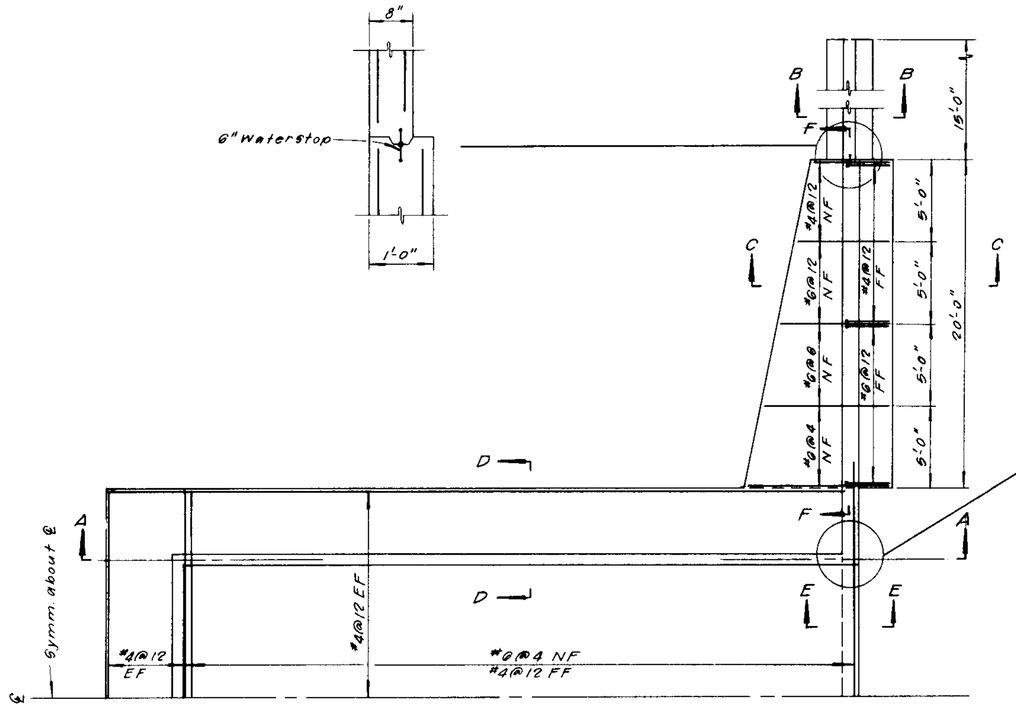

PLAN

DROP INLET

Scale: $\frac{1}{4}$"=1'

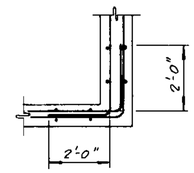

TYPICAL CORNER DETAIL

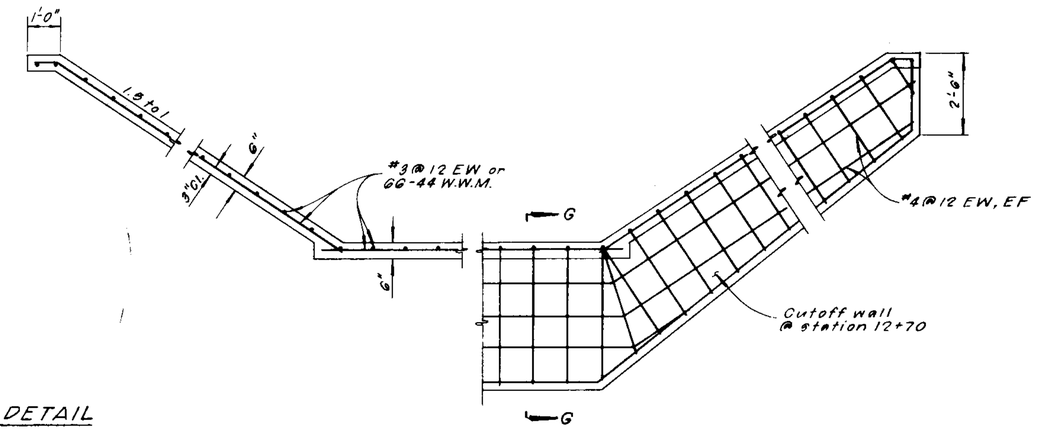

SPILLWAY CHUTE SECTION

Scale: $\frac{1}{4}$"=1'

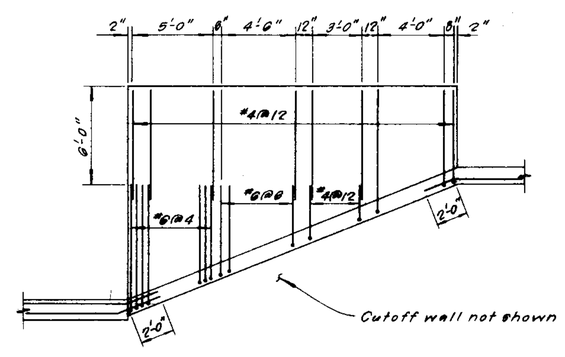

SECTION F-F

Scale: $\frac{1}{4}$"=1'

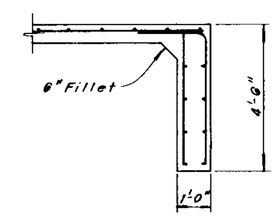

SECTION G-G

Scale: $\frac{1}{4}$"=1'

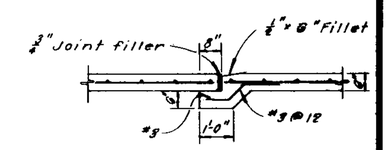

JOINT DETAIL
SPILLWAY CHUTE

Sta. 11+35, 11+90 and 12+45

Scale: $\frac{1}{4}$"=1'

This spillway design is for an erodible foundation. This drawing along with drawing no. 5 would normally replace drawing no. 9, which is for a non-erodible foundation. This design was selected to illustrate several types of design and construction features.

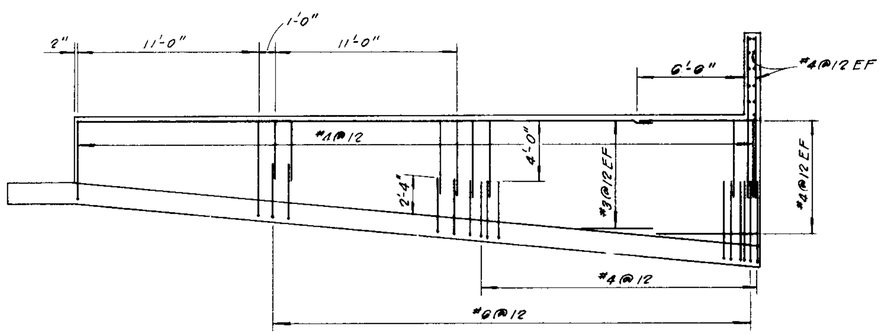

SECTION A-A

Scale: $\frac{1}{4}$"=1'

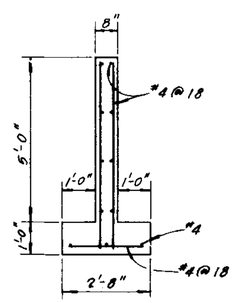

SECTION B-B

Scale: $\frac{1}{4}$"=1'

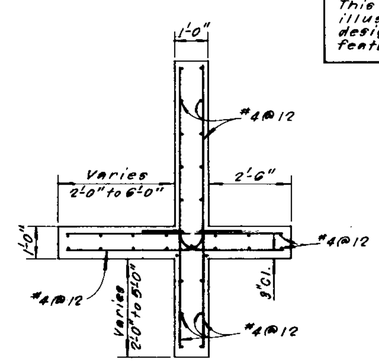

SECTION C-C

Scale: $\frac{1}{4}$"=1'

NOTES

1. Concrete shall have a 28 day compressive strength of 3000 p.s.i.
2. Reinforcing bars shall conform to A.S.T.M. A615 grade 40.
3. Welded wire mesh shall conform to A.S.T.M. A185.
4. Reinforcing shall have the following minimum cover:
   - Cast against earth 3 in.
   - Formed surfaces, #5 and smaller $1\frac{1}{2}$ in.
   - Formed surfaces, #6 and larger 2 in.
5. Splices in reinforcing bars shall be lapped 24 bar diameters.
6. Splices in welded wire mesh shall have an overlap equal to the distance between cross wires plus 2 inches.
7. NF = Near Face; FF = Far Face; EF = Each Face; EW = Each Way.

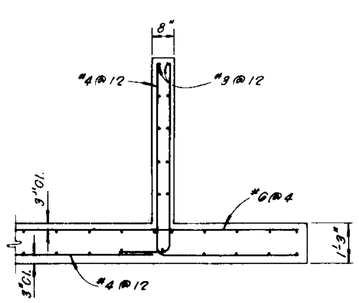

SECTION D-D

Scale: $\frac{1}{4}$"=1'

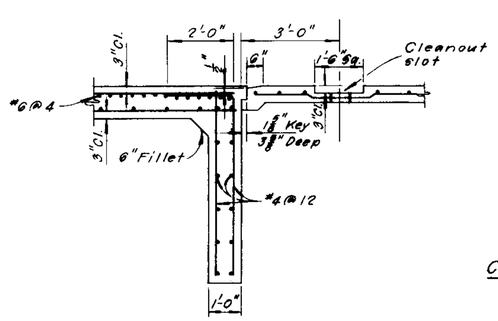

SECTION E-E

Scale: $\frac{1}{4}$"=1'

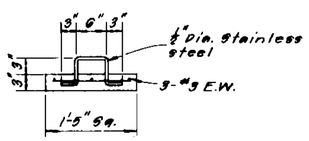

CLEANOUT COVER

3 Required

Scale: 1"=1'

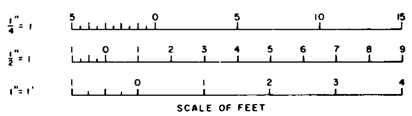

Think Safe — Be Safe

STATE OF CALIFORNIA
THE RESOURCES AGENCY
DEPARTMENT OF WATER RESOURCES
DIVISION OF SAFETY OF DAMS

SWEETWATER DAM AND RESERVOIR

ALTERNATE SPILLWAY

STRUCTURAL DETAILS

REV.	DATE	DESCRIPTION	SUB.	APP'D

DESIGNED | DRAWN | CHECKED | REVIEWED

SUBMITTED:

APPROVED: DATE:

APPROVAL RECOMMENDED:

APPROVAL RECOMMENDED:

DRAWING NO.

SHEET NO. 6