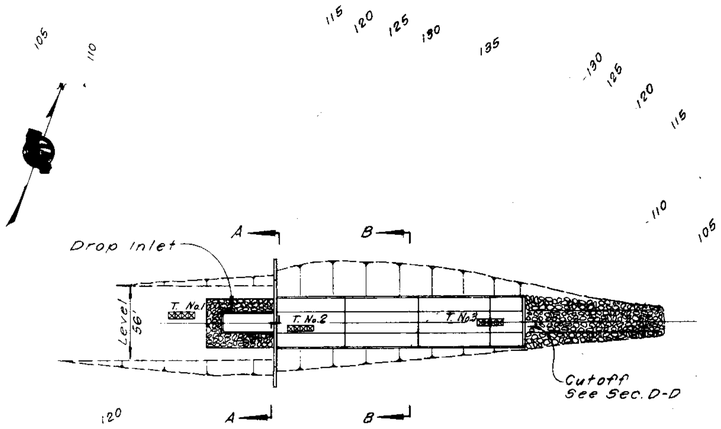

PLAN
Scale: 1"=50'

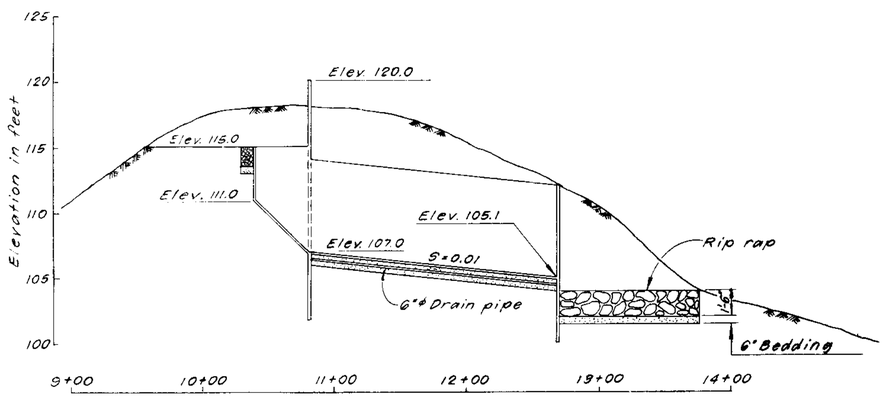

PROFILE
Scale: Horiz. 1"=50'
Vert. 1"=5'

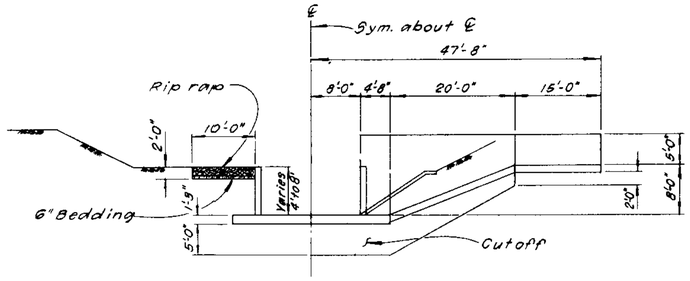

SECTION A-A
Scale: 3/32"=1'

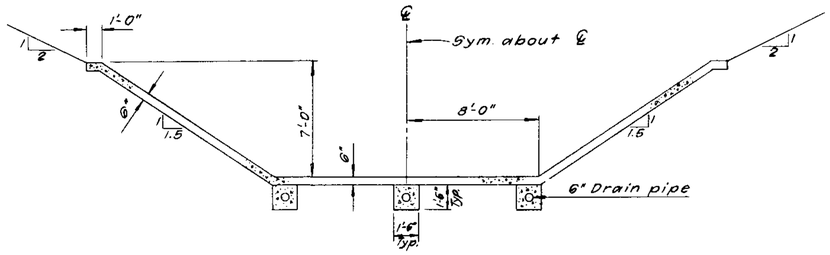

SECTION B-B
Scale: 1/4"=1'

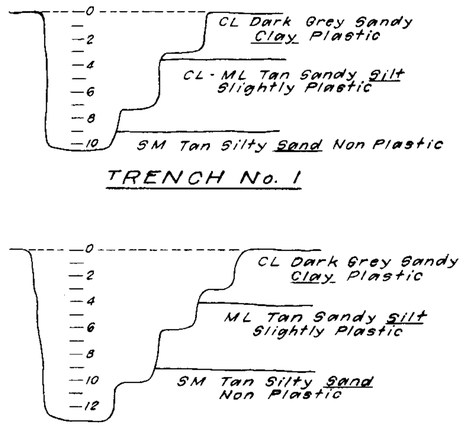

TRENCH No. 1

TRENCH No. 2

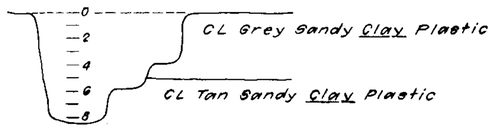

TRENCH No. 3

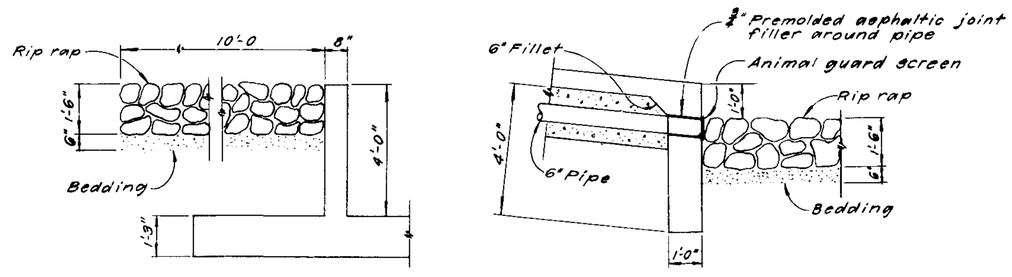

SECTION C-C
Scale: 1/2"=1'

SECTION D-D
Scale: 1/2"=1'

This spillway design is for an erodible foundation. This drawing along with drawing no. 6 would normally replace drawing no. 3, which is for a non-erodible foundation. This design was selected to illustrate several types of design and construction features.

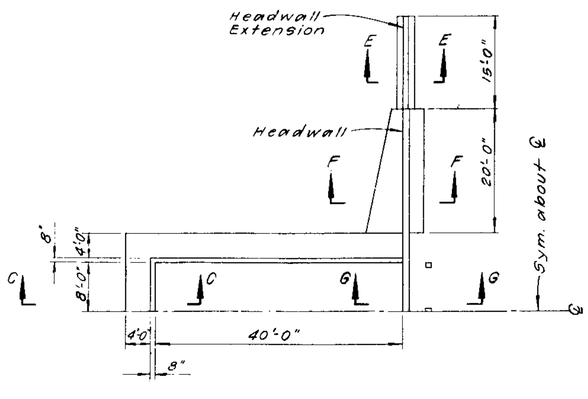

DROP INLET
HALF PLAN
Scale: 3/32"=1'

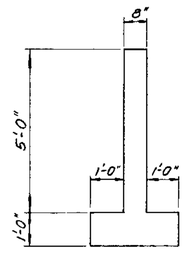

HEADWALL EXTENSION
SECTION E-E
Scale: 1/2"=1'

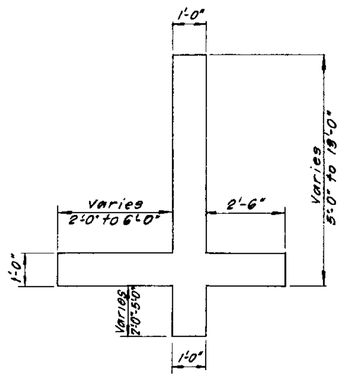

HEADWALL
SECTION F-F
Scale: 1/2"=1'

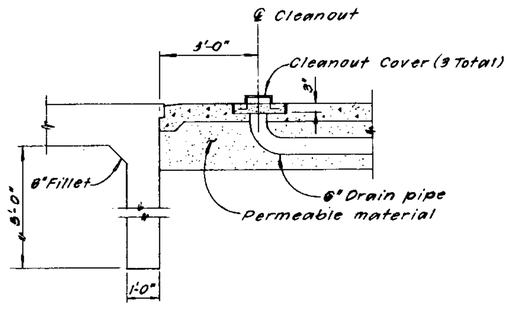

SECTION G-G
Scale: 1/2"=1'

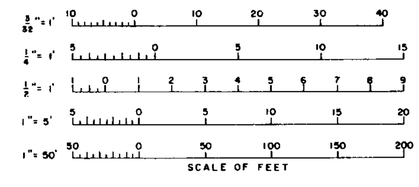

Think Safe — Be Safe

STATE OF CALIFORNIA
THE RESOURCES AGENCY
DEPARTMENT OF WATER RESOURCES
DIVISION OF SAFETY OF DAMS

SWEETWATER DAM AND RESERVOIR

ALTERNATE SPILLWAY

PLAN, PROFILE AND SECTIONS

REV.	DATE	DESCRIPTION	CHK.	APP'D

DESIGNED | DRAWN | CHECKED | REVIEWED

SUBMITTED: | APPROVED: | DATE:

APPROVAL RECOMMENDED:

APPROVAL RECOMMENDED:

DRAWING NO. | SHEET NO. 5